Vendor: Juniper

Exam Code:JN0-347

Exam Name: Enterprise Routing and Switching, Specialist (JNCIS-ENT)

Version: Demo

QUESTION 1

Which three statements are correct about the voice VLAN feature? (Choose three.)

A. It allows the access port to accept tagged voice and untagged data packets.

B. It allows you to apply independent CoS actions to data and voice packets.

C. It can be used with LLDP-MED to dynamically assign the VLAN ID value to IP phones.

D. It allows trunk ports to accept tagged voice and untagged data packets.

E. It must use the same VLAN ID as data traffic on a defined interface.

Correct Answer: ABC

A (not D): The Voice VLAN feature in EX-series switches enables access ports to accept both data (untagged) and voice (tagged) traffic and separate that traffic into different VLANs.

B: To assign differentiated priority to Voice traffic, it is recommended that class of service (CoS) is configured prior to enabling the voice VLAN feature. Typically, voice traffic is treated with a higher priority than common user traffic. Without differentiated treatment through CoS, all traffic, regardless of the type, is subject to the same delay during times of congestion.

C: In conjunction with Voice VLAN, you can utilize Link Layer Discovery Protocol Media Endpoint Discovery (LLDP-MED) to provide the voice VLAN ID and 802.1p values to the attached IP phones. This dynamic method associates each IP phone with the appropriate voice VLAN and assigns the necessary802.1p values, which are used by CoS, to differentiate service for voice traffic within a network.

QUESTION 2

You are currently defining a new OSPF area; The area must advertise external routes but should not

receive external routes from another area;

In this scenario, which type of area should you define?

A. stub

B. backbone

C. not-so-stubby

D. totally stubby

Correct Answer: A

QUESTION 3

Click the Exhibit button. Referring to the exhibit, which two statements are true?

Exhibit

```
[edit protocols bgp]
user@router# show
export policyA;
group isp-peers {
        type external;
        export policyC;
        local-as 7029;
        neighbor 192.168.200.1 {
            peer-as 709;
        }
}
group ibgp-peers {
        type internal;
        local-address 10.0.0.1;
        export policyB;
        cluster 1.1.1.1;
        neighbor 10.0.0.2 {
            export policyD;
        }
        neighbor 10.0.0.3 {
            export policyD;
        }
        neighbor 10.0.0.4;
}
```

A. The policy A routing policy takes precedence over all other policies.

B. No policy is used for neighbor 10.0.0.4.

C. The policy B routing policy is used by neighbor 10.0.0.4.

D. The policy D routing policy is the only policy used by neighbor 10.0.0.2.

Correct Answer: CD

C: A group-level import or export statement, such as export policy B within the group ibgp-peer\\'s statements, overrides a global BGP import or export statement. It is applied to neighbor 10.0.0.4

QUESTION 4

Click the Exhibit button.

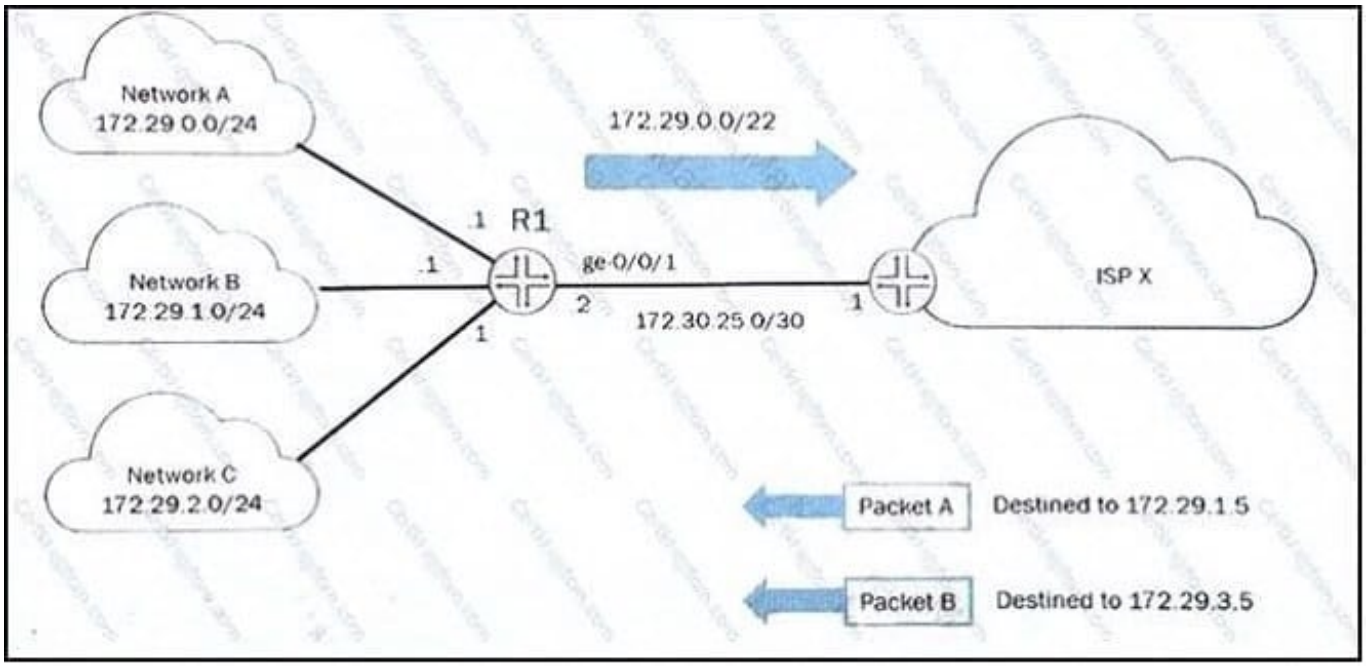

Referring to the exhibit, when using the default routing behavior, what happens to Packet A and Packet B on R1?

A. Packet A is rejected and Packet B is forwarded to its destination.

B. Packet A is forwarded to its destination and Packet B is rejected.

C. Packet A and Packet B are forwarded to their respective destinations.

D. Packet A and Packet B are discarded.

Correct Answer: B

QUESTION 5

You want to provide reachability to your data center by advertising its subnet throughout your upstream

peer AS.

However, you do not want this prefix advertised any further.

Which BGP community value would be used to meet this requirement?

A. no-advertise

B. no-export

C. no-export-subconfed

D. 65512 - 65535

Correct Answer: B

QUESTION 6

What are three extended BGP communities? (Choose three.)

A. Origin: 172.16.100.100:100

B. domain-id: 192.168.1.1:555

C. extend:454:350

D. 172.16.90.100:888

E. target:65000:65000

Correct Answer: ABE

The BGP extended communities attribute format has three fields:

type: administrator: assigned-number. type is the type of extended community and can be either the 16-bit

numerical identifier of a specific BGP extended community or one of these types: origin-- Identifies where

the route originated. domain-id-- Identifies the OSPF domain from which the route originated. target-Identifies the destination to which the route is going.

bandwidth-- Sets up the bandwidth extended community. Specifying link bandwidth allows you to distribute

traffic unequally among different BGP paths.

rt-import-- Identifies the route to install in the routing table. src -as-- Identifies the AS from which the route

originated.

You must specify an AS number, not an IP address.

QUESTION 7

Click the Exhibit button.

```
[edit protocols ospf]
user@host# show
area 0.0.0.0 {
     interface ge-0/0/1.0;
}
area 0.0.0.1 {
     nssa {
          default-lsa {
               default-metric 10;
               type-7;
          }
          no-summaries;
     }
}
```

What will be two results of the OSPF configuration shown in the exhibit? (Choose two.)

A. A default route will be advertised into Area 1 as a Type 7 LSA.

B. Area 0 will not generate summary LSAs for networks in Area 1.

C. There will be no Type 3 LSAs in Area 1.

D. Only Type 7 LSAs will be present in Area 1.

Correct Answer: AB

QUESTION 8

Click the Exhibit button. You are notified that clients connected to your EX Series switch are not receiving

IP addresses from the DHCP server.

You examine the switch configuration and notice that DHCP snooping has been enabled. In this scenario,

what would cause the problem?

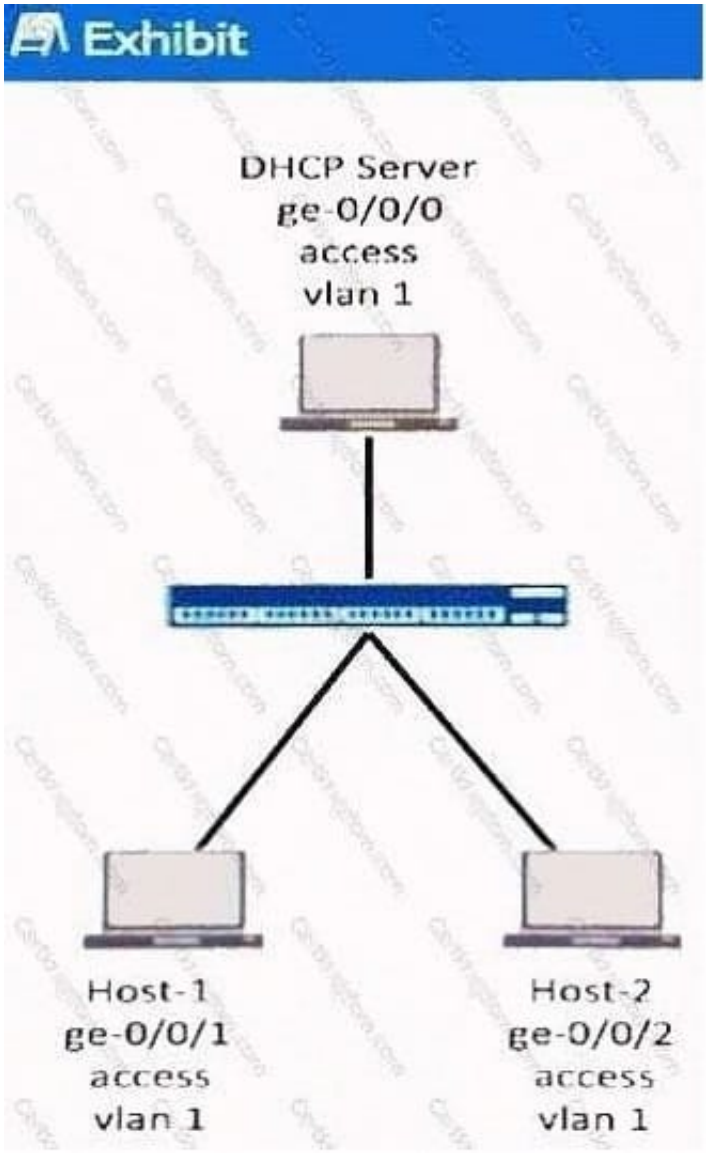

A. The location information is not being inserted into the DHCP option 82 requests.

B. The dynamic ARP inspection feature needs to be enabled on the ge-0/0/0 interface.

C. The DHCP relay setting in the forwarding-options hierarchy has not been configured.

D. The DHCP server\\'s ge-0/0/0 interface has not been configured as a trusted interface.

Correct Answer: B

You can configure DHCP snooping, dynamic ARP inspection (DAI), MAC limiting, persistent MAC learning, and MAC move limiting on the access ports of EX Series switches to protect the switches and the Ethernet LAN against address spoofing and Layer 2 denial-of-service (DoS) attacks.

You can also configure a trusted DHCP server and specific (allowed) MAC addresses for the switch interfaces. Step-by- Step Procedure Configure basic port security on the switch: Etc.

QUESTION 9

What are three types of bridge protocol data units? (Choose three.)

A. media endpoint discovery

B. topology change acknowledgement

C. topology change notification

D. type length value

E. configuration

Correct Answer: BCE

QUESTION 10

Click the Exhibit button.

```
[edit]
user@host# show interfaces
ge-0/0/1 {
     description "Link to R2";
     mtu 1476;
     unit 0 {
          family inet {
               address 192.168.6.1/30;
          }
          family iso;
     }
}
lo0 {
     unit 0 {
          family inet;
          family iso {
               address 49.0002.0000.0000.0001.00;
          }
     }
}

[edit]
user@host# show protocols isis
interface ge-0/0/1.0;
interface lo0.0;

[edit]
user@host#
```

The IS-IS adjacency between routers R1 and R2 will not establish. Referring to exhibit, what is the problem?

A. The ISO address is not configured on interface ge-0/0/1.

B. The level is not configured under protocols isis.

C. The IP address is not configured on interface lo0.

D. The link MTU is too small on interface ge-0/0/1.

Correct Answer: A

QUESTION 11

What is reviewed first in the BGP route selection process?

A. the peer with the lowest IP address

B. the route with an origin of incomplete

C. the path with no MED value

D. the next-hop resolution

Correct Answer: D

QUESTION 12

Which two values are used to generate a bridge ID when using STP? (Choose two.)

A. system MAC address

B. bridge priority

C. port identifier

D. loopback IP address

Correct Answer: AB