100% Money Back Guarantee

Vendor:HP

Exam Code:HPE6-A41

Exam Name: Applying Aruba Switching Fundamentals for Mobility

Version: Demo

QUESTION 1

A company has an Aruba 5400R switch, switch 1, at the network core of its campus. This switch routes all traffic for the campus and is the RSTP root. The company now wants to add another Aruba 5400R switch to the core in order to enhance resiliency. The company wants to use the option that provides the best Layer 2 and Layer 3 resiliency and also the simplest setup.

What should the administrator do to add the new 5400R switch?

A. Add the new switch and migrate to MSTP with two instances.

B. Add the new switch and set up OSPF on all switches.

C. Add the new switch as a secondary root bridge in RSTP.

D. Add the new switch as a standby member in a VSF fabric with switch 1.

Correct Answer: C

QUESTION 2

What is a requirement for links to successfully participate in an aggregated link?

A. that links have the spanning tree protocol disabled

B. that links use the same speed and duplex mode

C. that links use the same media type and are untagged

D. that links are untagged and are associated to the same VLAN

Correct Answer: B

QUESTION 3

Refer to the exhibit. Exhibit 1.

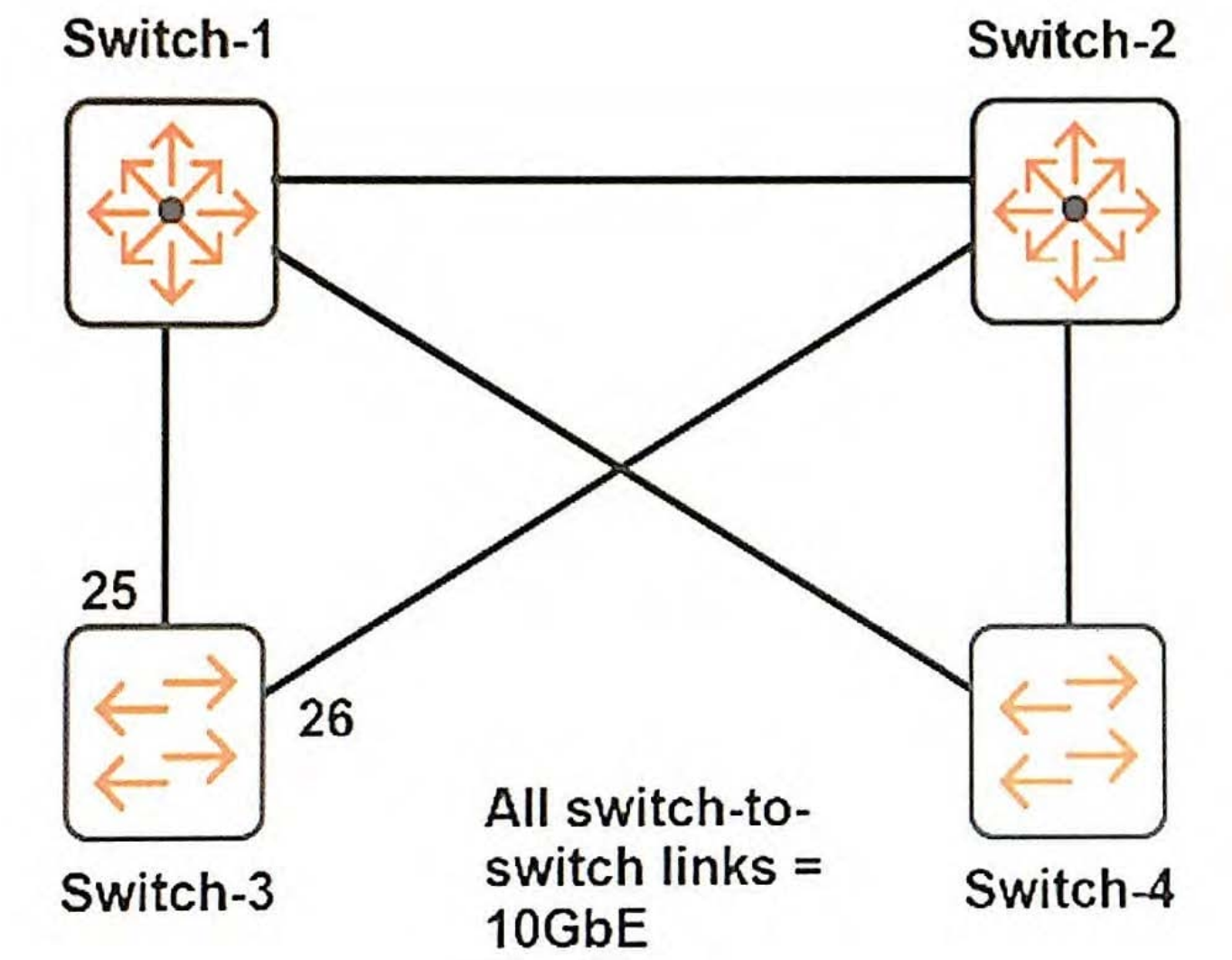

Exhibit 2.

```
Switch-3# show spanning-tree 25-26 instance 2

<-output omitted->
Designated
Port  Type       Cost      Priority Role       State        Bridge
----- --------- --------- -------- ---------- ------------ --------------
25    100/1000T 20000     128      Master     Forwarding   6c3be5-6208c0
26    100/1000T 20000     128      Alternate  Blocking     6c3be5-6208c0
```

Spanning tree runs on the switches shown in the exhibit. The network administrator enters these commands:

```
Switch-1(config)# spanning-tree priority 0
Switch-1(config)# spanning-tree instance 1 priority 0
Switch-1(config)# spanning-tree instance 2 priority 1
Switch-2(config)# spanning-tree priority 1
Switch-2(config)# spanning-tree instance 1 priority 1
Switch-2(config)# spanning-tree instance 2 priority 0
```

The administrator enters the show spanning-tree instance 2 command on Switch-3 and sees the output shown in Exhibit

2.

What could explain the output results?

A. Switch-1 has a lower MAC address than Switch-2.

B. Switch-1 has a higher MAC address than Switch-2.

C. Switch-3 filters BPDUs on port 26.

D. Switch-3 has incompatible MSTP region settings with other switches.

Correct Answer: D

QUESTION 4

Refer to the exhibit.

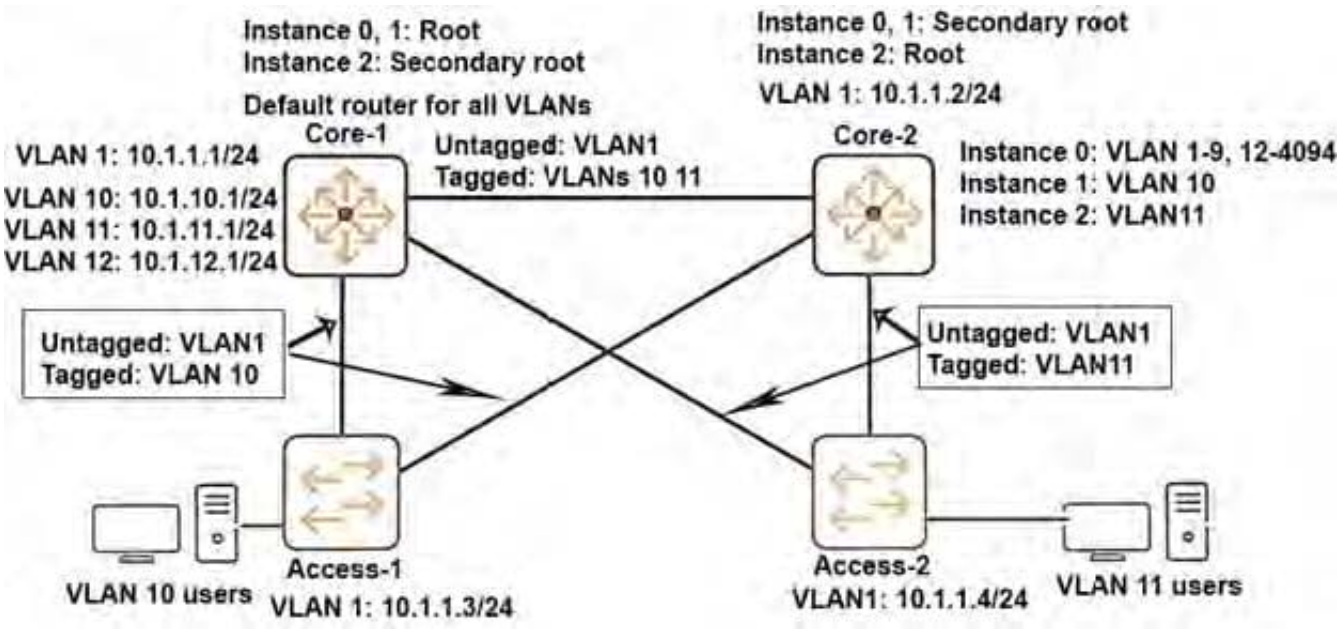

The link between Core-1 and Core-2 shown in the exhibit fails, and some users lose connectivity. What should the network administrator do to prevent this issue in a situation such as this?

A. Configure BPDU protection on all Core-2 ports.

B. Enable IP routing on Core-2.

C. Create routes to 10.1.10.0/24 and 10.1.11.0/24 through 10.1.1.3 on Core-2.

D. Extend VLANs 10 and 11 on all switch-to-switch links.

Correct Answer: D

QUESTION 5

Refer to the exhibit.

```
Switch# show lacp
```

Port	LACP Enabled	Trunk Group	LACP Port Status	Partner	LACP Status	Admin Key	Oper Key
A1	Active	Trk2	Up	Yes	Success	0	963
A2	Active	Trk2	Blocked	Yes	Failure	0	963

Which issue could cause the Blocked status on A2?

A. A1 and A2 are connected to different switches.

B. A1 and A2 use different trunk load balancing modes.

C. A1 and A2 support different VLANs.

D. A1 and A2 have spanning tree enabled on the link aggregation.

Correct Answer: D

QUESTION 6

Refer to the exhibit.

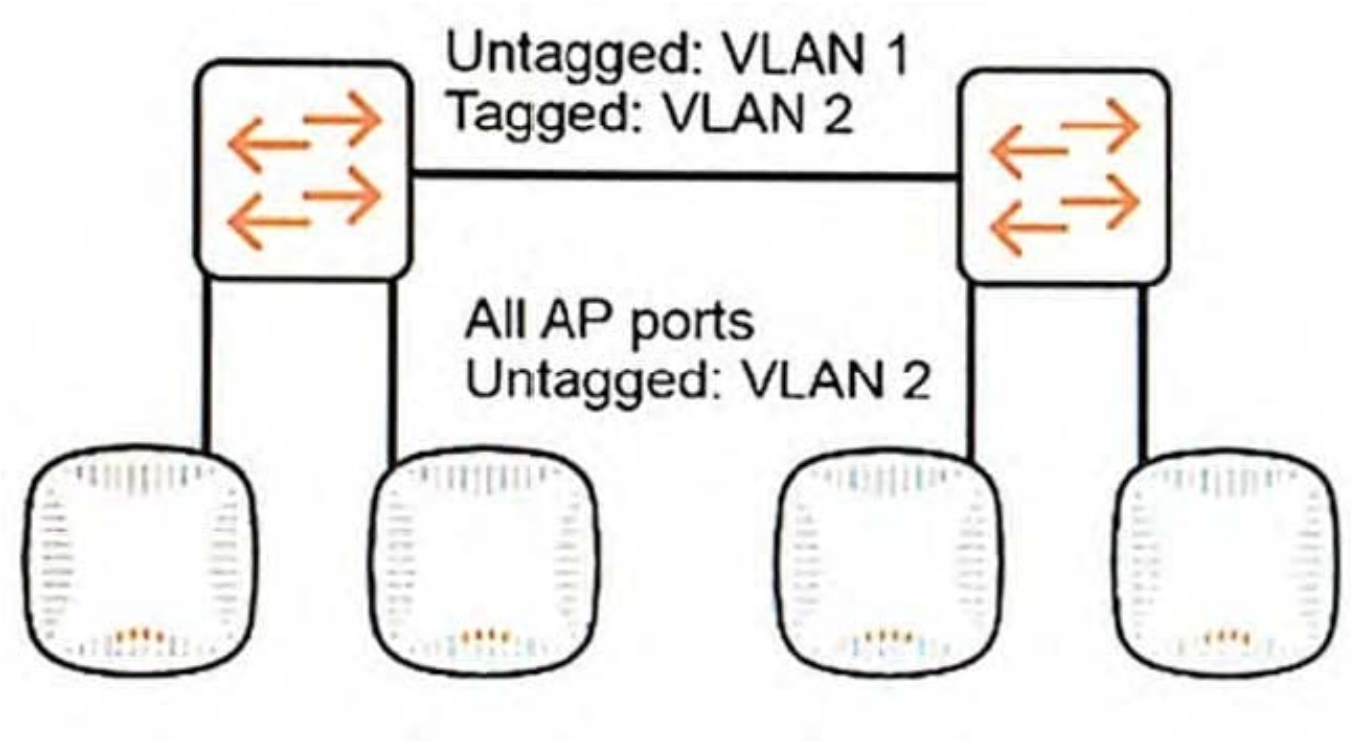

A network administrator connects several new Aruba Instant APs (at factory defaults), as shown in the exhibit. After waiting several minutes for the cluster to form, the administrator is ready to provision the cluster. The administrator wants to be redirected to the Instant UI without the need to know the correct IP address.

How should the administrator connect the management station to enable access to the virtual controller (VC)?

A. to a switch port in the same VLAN

B. directly to one instant AP\\'s second Ethernet port

C. to the Instant SSID

D. directly to one Instant AP\\'s Basic Service Set (BSS)

Correct Answer: D

QUESTION 7

A network administrator prepares an ArubaOS switch to be monitored and managed by AirWave.

Which credentials are required for AirWave to change configuration settings on the switch?

A. RADIUS shared secret

B. SNMPv2c community with manager unrestricted privileges

C. Telnet or SSH password

D. SNMPv3c user in the ManagerPriv group

Correct Answer: A

QUESTION 8

Two switches are members of a Virtual Switching Framework (VSF) fabric.

Which statement correctly describes how the switches handle routing?

A. Only the commander runs routing protocols and builds the IP routing table, but it programs the standby member to route traffic.

B. Both members build their own IP routing tables, which they synchronize. Only static IP routing is supported with VSF.

C. Only the commander runs routing protocols and builds the IP routing table, and all routed traffic must pass through the commander.

D. Both members run routing protocols and build their own IP routing tables, and they synchronize the tables over VSF links.

Correct Answer: C

QUESTION 9

A network administrator discovers and then authorizes several ArubaOS switches in Aruba AirWave. Immediately after

the administrator authorizes the switches, AirWave cannot communicate with the switches anymore.

What should the administrator do to restore communication?

A. Change the SNMP and Telnet/SSH credentials in the AirWave global communication settings to match those on the switches.

B. Change the management level for the switches to Monitoring and Firmware Updates Only.

C. Specify the SNMP and Telnet/SSH credentials on the switches to update the individual communication settings on the switches.

D. Change the management level for the switches to Manage Read/Write.

Correct Answer: C

QUESTION 10

Refer to the exhibit.

Exhibit 1.

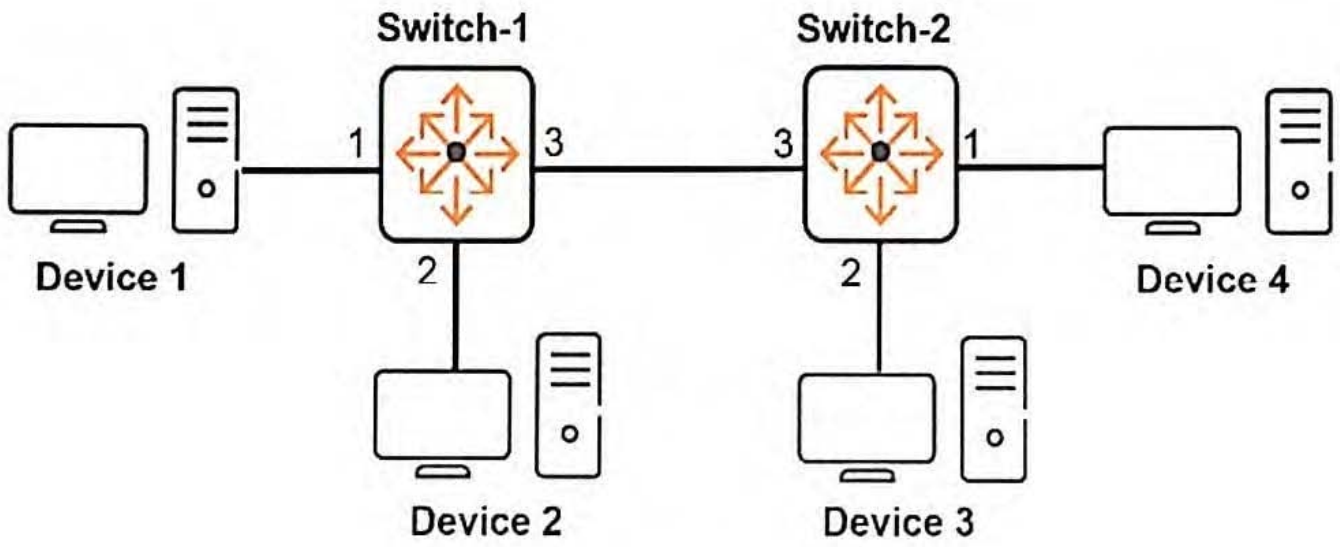

Exhibit 2.

```
Switch-1# show vlan 2
Status and Counters - VLAN Information - VLAN 2
VLAN ID : 2
<-output omitted->
Port Information Mode     Unknown VLAN Status
---------------- -------- ------------ ----------
1                Untagged Learn        Up
3                Tagged   Learn        Up

Switch-1# show vlan 3
Status and Counters - VLAN Information - VLAN 3
VLAN ID : 3
<-output omitted->
Port Information Mode     Unknown VLAN Status
---------------- -------- ------------ ----------
2                Untagged Learn        Up
3                Tagged   Learn        Up

Switch-2# show vlan 2
Status and Counters - VLAN Information - VLAN 2
VLAN ID : 2
<-output omitted->
Port Information Mode     Unknown VLAN Status
---------------- -------- ------------ ----------
1                Untagged Learn        Up
3                Tagged   Learn        Up

Switch-2# show vlan 3
Status and Counters - VLAN Information - VLAN 3
VLAN ID : 3
<-output omitted->
Port Information Mode     Unknown VLAN Status
---------------- -------- ------------ ----------
2                Untagged Learn        Up
3                Tagged   Learn        Up
```

Which devices can communicate with each other at Layer 2?

A. Devices 1 and 2 can communicate at Layer 2; Devices 3 and 4 can communicate at Layer 2.

B. Devices 2 and 3 can communicate at Layer 2.

C. Devices 1 and 3 can communicate at Layer 2.

D. Devices 1 and 4 can communicate at Layer 2; Devices 2 and 3 can communicate at Layer 2.

Correct Answer: B

QUESTION 11

Which type of 802.11 wireless network can be hosted by an endpoint device such as a laptop?

A. a wireless distribution system

B. an ad hoc network

C. a wireless mesh or bridge

D. an infrastructure network

Correct Answer: B

QUESTION 12

Refer to the exhibit.

```
Switch# show ip route
                                IP Route Entries
  Destination        Gateway         VLAN Type      Sub-Type   Metric     Dist.
  ------------------ --------------- ---- --------- ---------- ---------- -----
  192.168.1.4/30     VLAN104         104  connected            1          0
  192.168.1.8/30     VLAN108         108  connected            1          0
  172.16.2.0/24      192.168.1.5     104  static               1          1
  127.0.0.0/8        reject               static               0          0
  127.0.0.1/32       lo0                  connected            1          0
```

The network administrator enters this command:

Switch(config)# ip route 172.16.2.0/30 192.168.1.100 metric 1 distance 1

Why does this route fail to appear in the IP routing table?

A. Its prefix length is invalid.

B. Its next hop is unreachable.

C. Its administrative distance is the same as an existing static route.

D. Its metric is the same as an existing static route.

Correct Answer: B