Vendor:EMC

Exam Code:DES-6322

Exam Name: Specialist - Implementation Engineer-VxRail Exam

Version: Demo

QUESTION 1

The VxRail Deployment Wizard is being used on a VxRail cluster with a customer-supplied VDS. Which settings must be used to ensure successful installation?

A. Use the VxRail vCenter Server Upload a configuration file (JSON)

B. Join an external vCenter Server Use the step-by-step method

C. Use the VxRail vCenter Server Use the step-by-step method

D. Join an external vCenter Server Upload a configuration file (JSON)

Correct Answer: C

QUESTION 2

What setting is used for the object space reservation in the VXRAIL-SYSTEM-STORAGE-PROFILE?

A. 50% Reservation

B. Thick Provisioning

C. 75% Reservation

D. Thin Provisioning

Correct Answer: D

QUESTION 3

A systems engineer needs to ensure that the VxRail system is healthy and any issues found are addressed prior to starting an upgrade process. Where in the vSphere Client can they review alarms and overall vSAN health?

A. Triggered Alarms > Issues and Alarms > All issues Triggered Alarams > vSAN > Skyline Health

B. Monitor > All Issues > Issues and Alarms Monitor > vSAN > Health

C. Triggered Alarms > All Issues > Issues and Alarms Triggered Alarms > vSAN > Health

D. Monitor > Issues and Alarms > All issues Monitor > vSAN > Skyline Health

Correct Answer: B

QUESTION 4

An implementation engineer is tasked with setting up RecoverPoint for VMs on a single G Series chassis. How many VMs are licensed to be protected on the cluster?

B. 10

C. 15

D. 20

Correct Answer: C

Reference: https://www.dell.com/community/VxRail/Recoverpoint-for-vm-starter-packs/td-p/7141487

QUESTION 5

What is a consideration when performing a VxRail software upgrade from version 4.7.xxx to version 7.0.xxx?

A. External vCenter server must be upgraded after the VxRail is upgraded

B. vCenter Server requires a temporary IP address on a different subnet before the upgrade

C. Secure boot must be enabled on the ESXi hosts for a successful upgrade

D. VxRail Manager VM must be changed to the default name to avoid an upgrade failure

Correct Answer: A

QUESTION 6

Which vSAN feature requires an All-Flash cluster?

A. Deduplication and compression

B. Data-at-Rest Encryption

C. Data-in-Transit Encryption

D. Storage Policy Based Management

Correct Answer: A

QUESTION 7

What is the correct CLI command to collect only the vCenter logs on VxRail Manager?

A. vc-support.sh –v

B. generateFullBundle.py –v

C. vc-support-bundle.sh –c

D. generateLogBundle.py –c

Correct Answer: D

Reference: https://davidring.ie/2021/01/14/vxrail-7-0-useful-log-file-information/

QUESTION 8

Which series of VxRail nodes supports either Intel or AMD processors and either hybrid or All-Flash storage?

A. G Series

B. D Series

C. E Series

D. V Series

Correct Answer: A

QUESTION 9

DRAG DROP

Match each VxRail data protection solution with its functionality.

Select and Place:

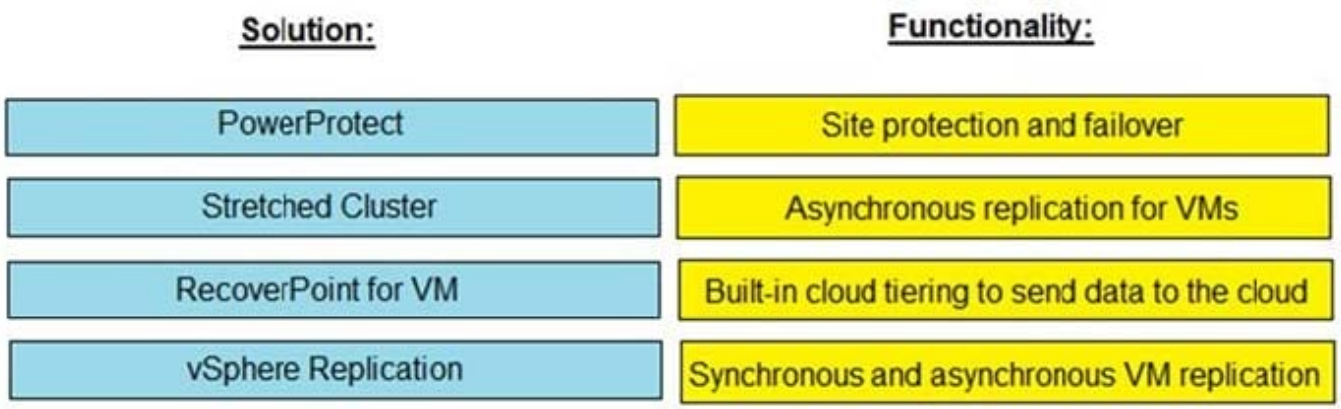

Correct Answer:

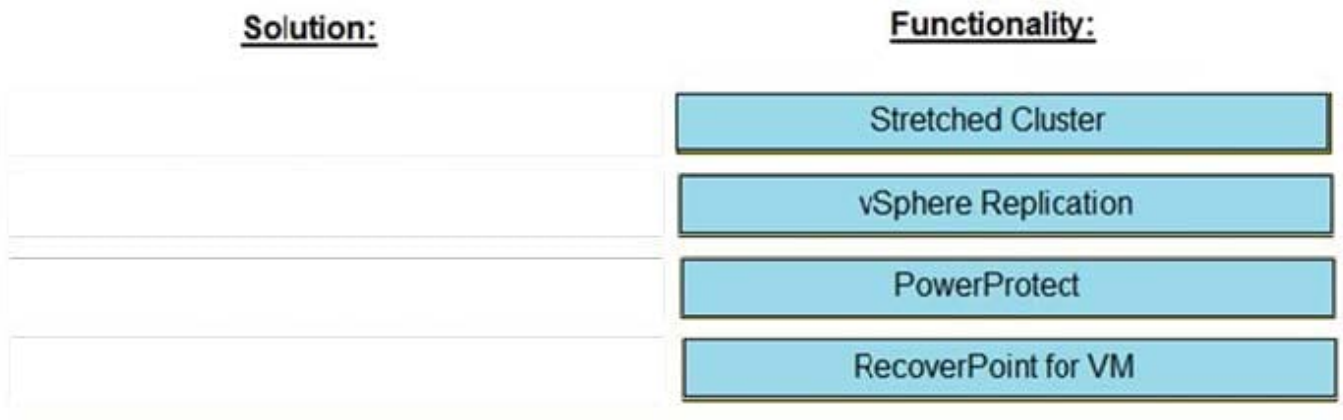

Reference: https://www.vmware.com/products/vsphere/replication.html

https://volumes.blog/2020/08/31/rp4vms53/

https://infohub.delltechnologies.com/l/techbook-dell-emc-vxrail-system-2/data-protection-82#:~:text=Protecting%20VM%20workloads%20on%20VxRail%20clusters%20can%20be%20achieved%20with%20various%20options.andtext=Stretched %20clusters%20are%20a%20native,in%20case%20of%20site%20failures

---

QUESTION 10

According to the VxRail PEQ Engagement Details worksheet, links to what resources should the SE send to the customer?

A. VxRail vCenter Server Planning Guide Network Validation Tool

B. VxRail vCenter Server Planning Guide VxRail Network Planning Guide

C. VxRail QuickStart Guide VxRail Network Planning Guide

D. VxRail QuickStart Guide Network Validation Tool

Correct Answer: D

QUESTION 11

What is a valid 2-node VxRail cluster configuration?

A. 2x 10 GbE and 2x 25 GbE in a switch configuration and external vCenter

B. 2x 1 GbE and 2x 10 GbE in a direct-connect configuration and external vCenter

C. 2x 1 GbE and 2x 10 GbE in a switch configuration and internal vCenter

D. 2x 10 GbE and 2x 25 GbE in a direct-connect configuration and internal vCenter

Correct Answer: B

Reference: https://www.delltechnologies.com/asset/en-us/products/converged-infrastructure/technical-

support/h17566-vsan-2node-cluster-on-vxrail-planning-guide.pdf (P.5)

QUESTION 12

DRAG DROP

Match each VxRail configuration with its related characteristic.

Select and Place:

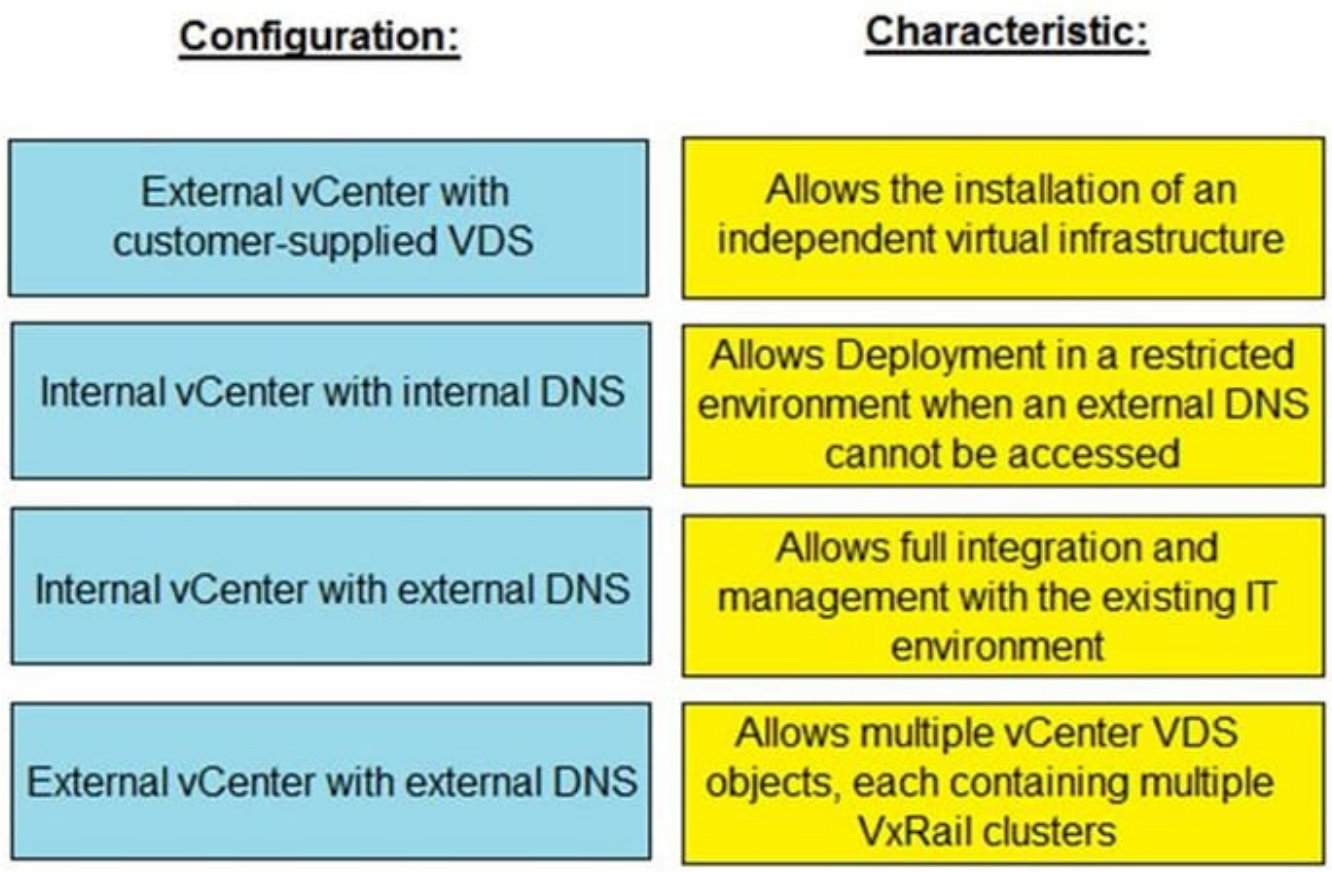

Correct Answer:

Configuration:	Characteristic:
	External vCenter with external DNS
	Internal vCenter with external DNS
	Internal vCenter with internal DNS
	External vCenter with customer-supplied VDS